MAIN AND FITTING DIMENSIONS

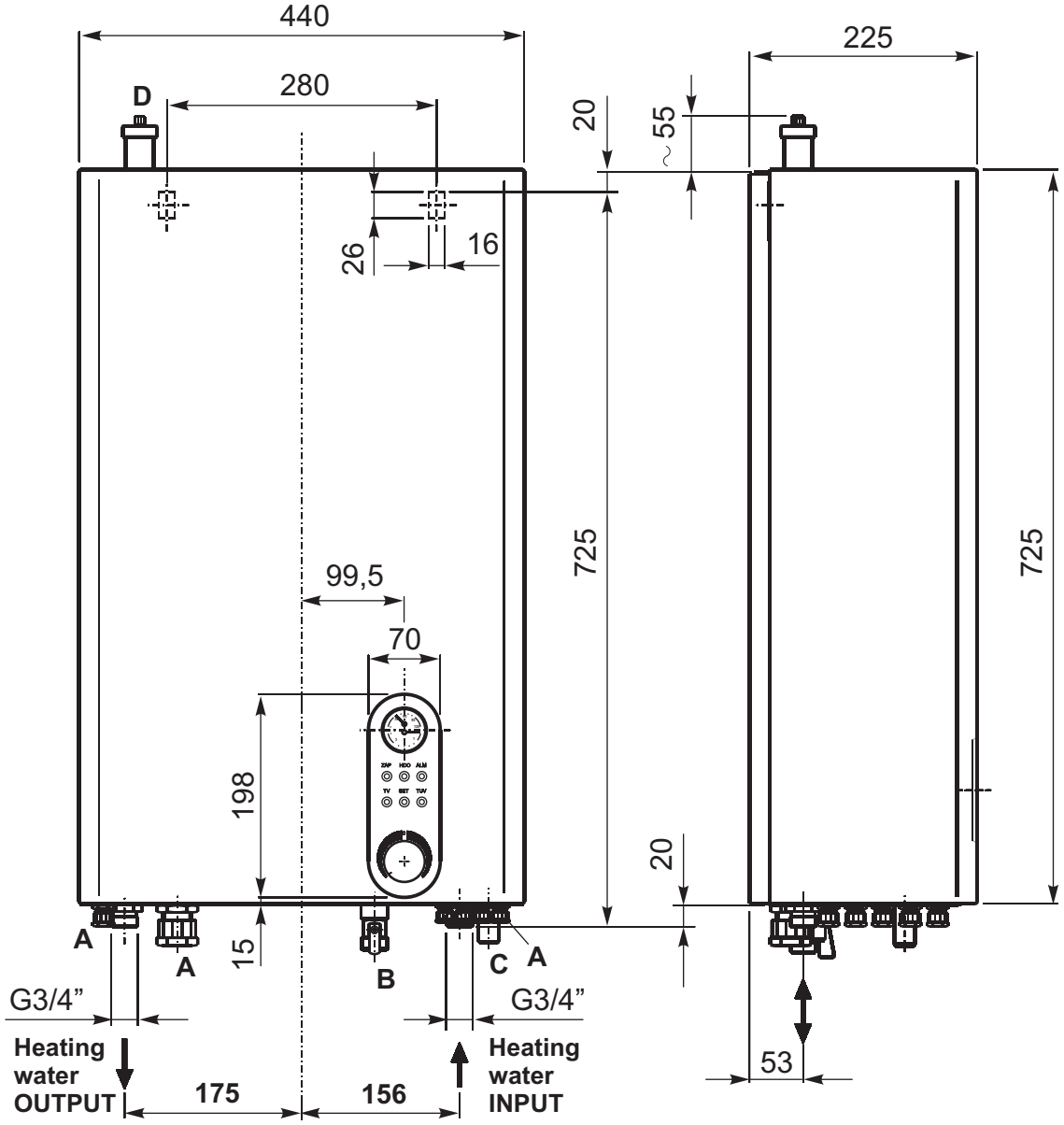

A - electric cable grommets
B - ball valve G 3/4 - additional filling of the system
C - exhaust from safety valve - tube ϕ 20
D - air bleed valve (to be fitted after unpacking the boiler)